REV.	ECN NO.	DESCRIPTION	DRAW	APPD.	DATE
A	---	新版本发行	Tanghaibo	DMX	2016.09.07
A1	---	胶芯加胶	Tanghaibo	Hank Pei	2017.08.14

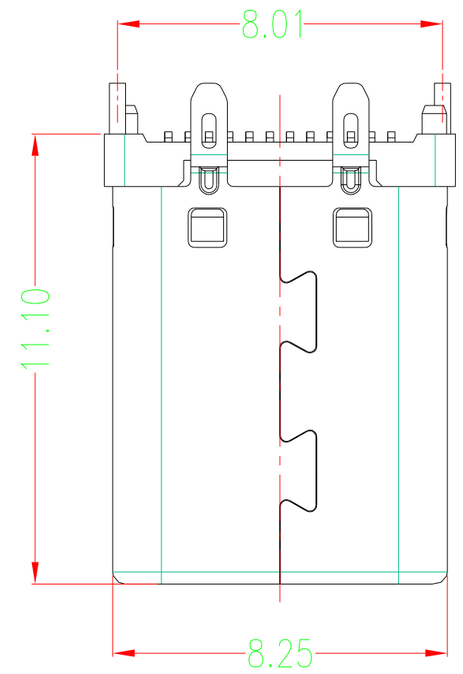

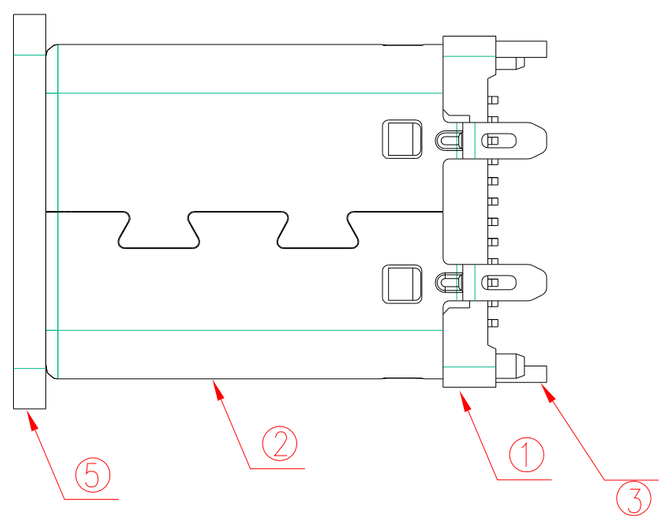

NOTES:

SPECIFICATION:

1. CURRENT RATING: 3.0A MAX
2. VOLTAGE: 100 VAC
3. TEMPERATURE RANGE: -30 °C ~ 85 °C
4. CONTACT RESISTANCE: 40 MILLIONHM MAX
5. INSULATION RESISTANCE: 100 MEGOHMS MIN.
6. LNSERTION FORCE : 5N~20N
7. UNMATING FORCE: 8N~20N
8. DURABILITY: 10,000 CYCLES

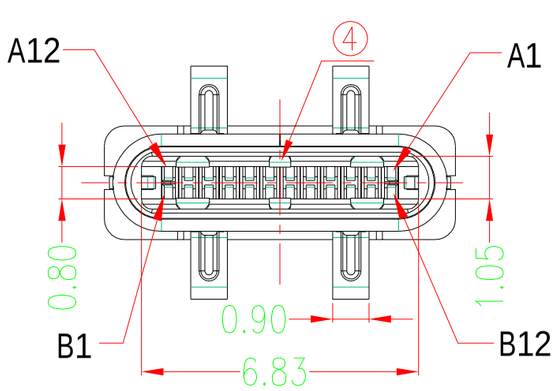

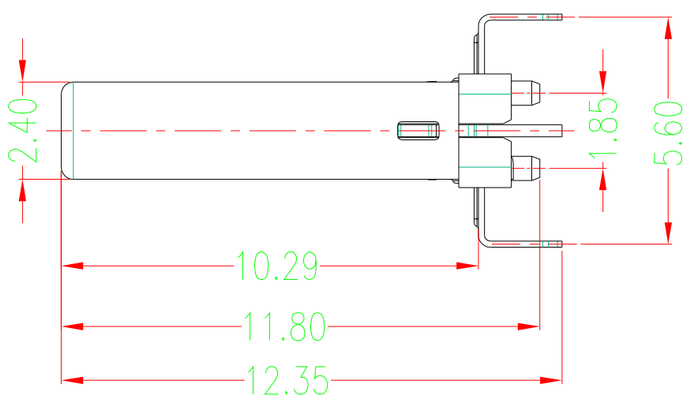

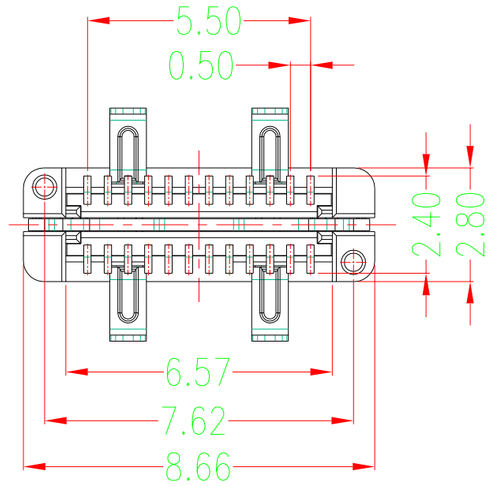

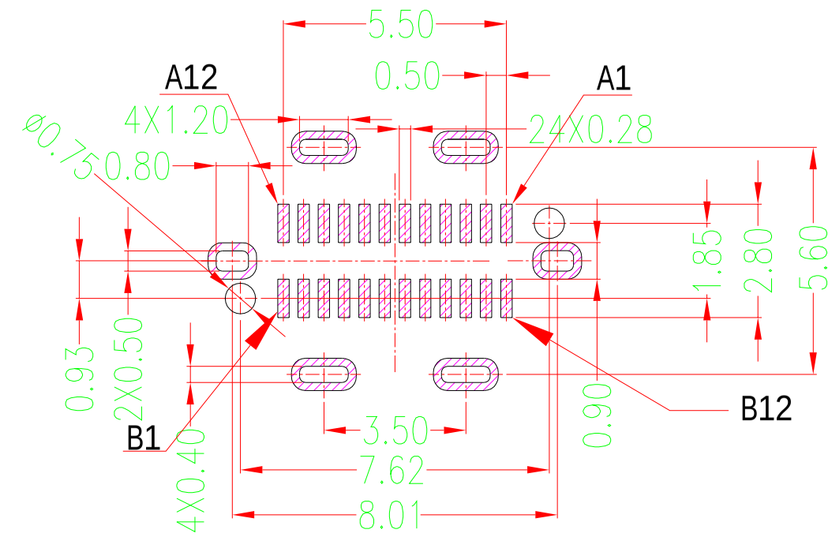

RECOMMENDED PCB LAYOUT(t=0.80±0.05)
COMPONENT SIDE(GENERAL TOLERANCE:±0.05)

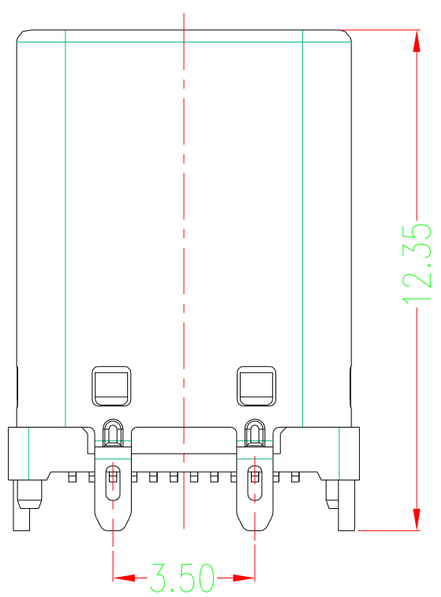

A1	GND	B12	GND
A2	SSTXP1	B11	SSRXP1
A3	SSTXN1	B10	SSRXN1
A4	VBUS	B9	VBUS
A5	CC1	B8	SBU2
A6	DP1	B7	DN2
A7	DN1	B6	DP2
A8	SBU1	B5	CC2
A9	VBUS	B4	VBUS
A10	SSRXN2	B3	SSTXN2
A11	SSRXP2	B2	SSTXP2
A12	GND	B1	GND
PIN	SIGNAL NAME	PIN	SIGNAL NAME

NO.	DESCRIPTION	MATERIAL	REMARKS	QTY
5	COVER	HIGH TEMPERATURE PLASTIC	BLACK	1PCS
4	SPRING	STAINLESS STEEL	---	2PCS
3	LATCH	STAINLESS STEEL	TIN/NI Plated	1PCS
2	SHELL	STAINLESS STEEL	NI Plated	1PCS
1	TERMINALI HOUSING	HIGH TEMPERATURE PLASTIC	BLACK/NATURE	2PCS

TOLERANCE			
X.X	±0.30	X.°	± 2°
.XX	±0.20	.X°	± 1°
.XXX	±0.10	.XX°	±0.5°
UNITS		mm	
MATERILA			
FINISH			

NAME(INTENDED USE)
CUSTOMER DRAWING

PART NO.
5001-014001020-129

APPD:

CHED:

DRAW:

深圳市文章济美科技有限公司

TITLE:
USB C M TYPE 直立式外壳4支脚

DRAWG NO.
0140-1290

SCALE	SHEET	REV.
1:1	1/1	A1