REV.	ECN NO.	DESCRIPTION	DRAW	APPD.	DATE
A	---	新版本发行	DMX	DMX	2015.05.25

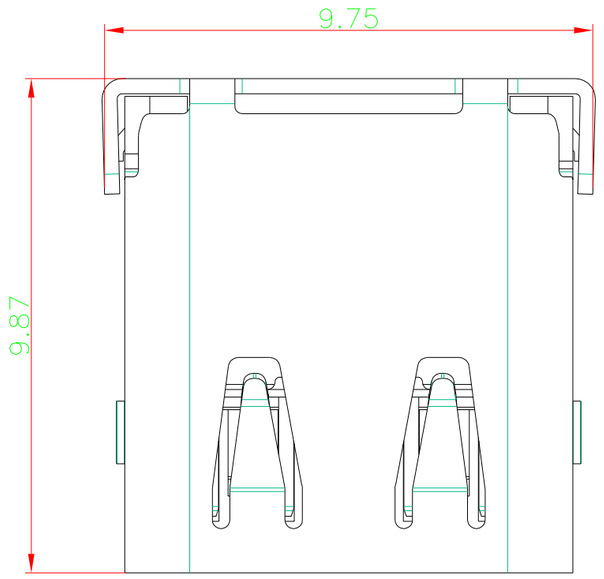

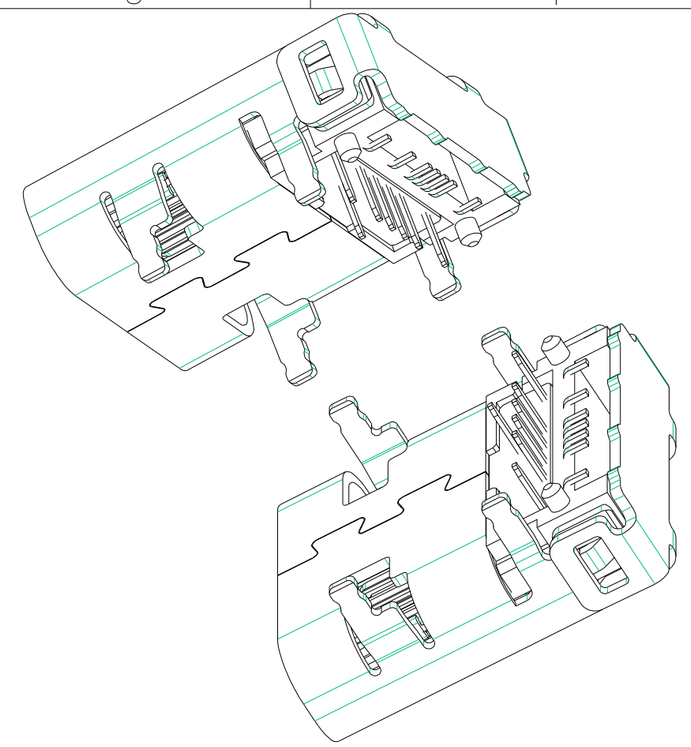

NOTES:

SPECIFICATION:

1. CURRENT RATING: 3.0A MAX
2. VOLTAGE: 100 VAC
3. TEMPERATURE RANGE: -30 °C ~ 85 °C
4. CONTACT RESISTANCE: 40 MILLIONHM MAX
5. INSULATION RESISTANCE: 100 MEGOHMS MIN.
6. LNSERTION FORCE : 5N~20N
7. UNMATING FORCE: 8N~20N
8. DURABILITY: 10,000 CYCLES

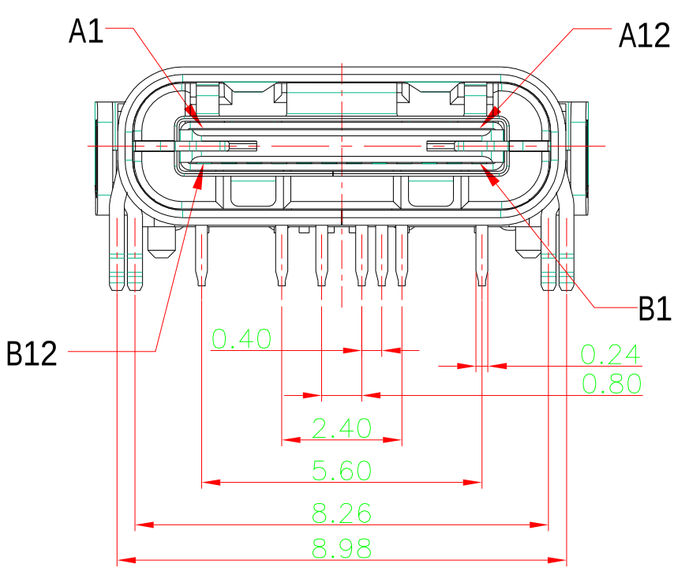

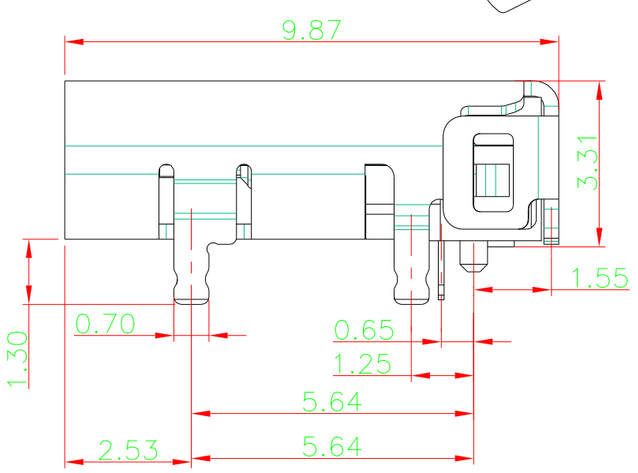

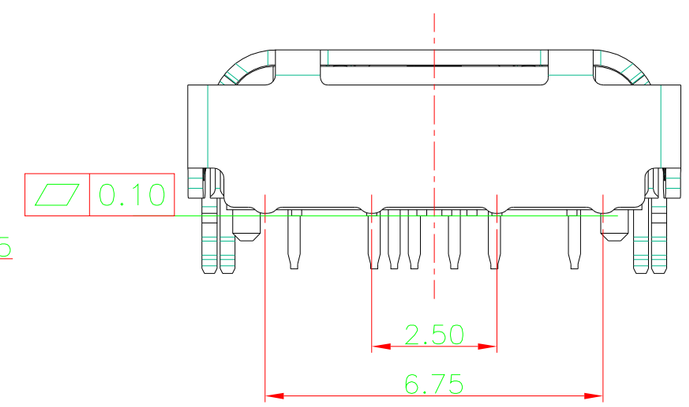

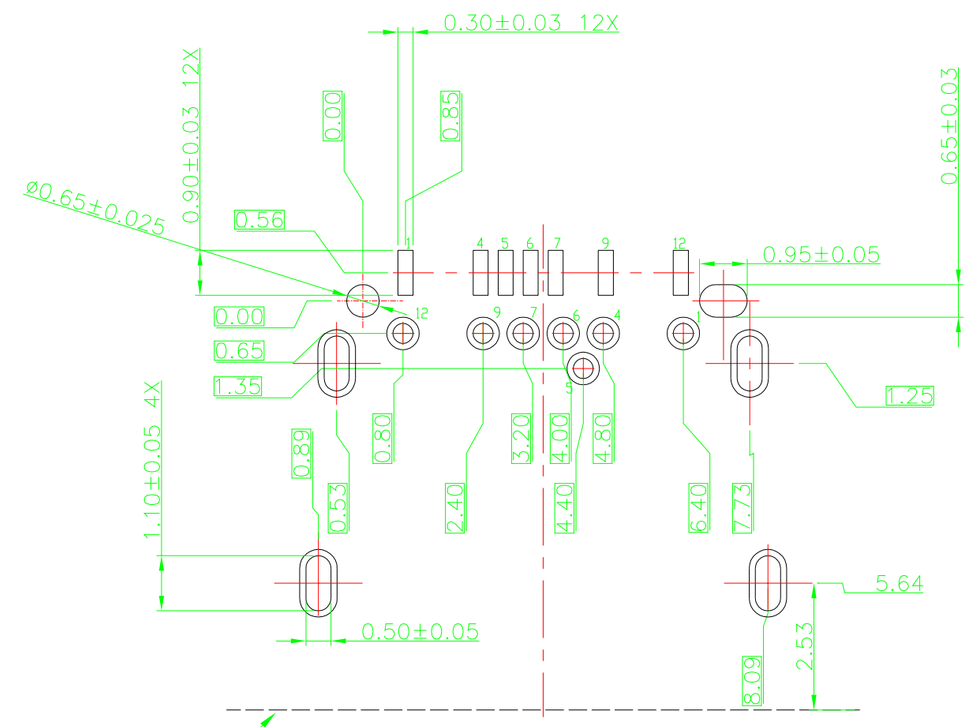

CONNECTOR FRONT EDCE

RECOMMENDED P.C.B. LAYOUT (T:1.00mm)

TOLERANCE UNSPECIFIED ±0.05mm

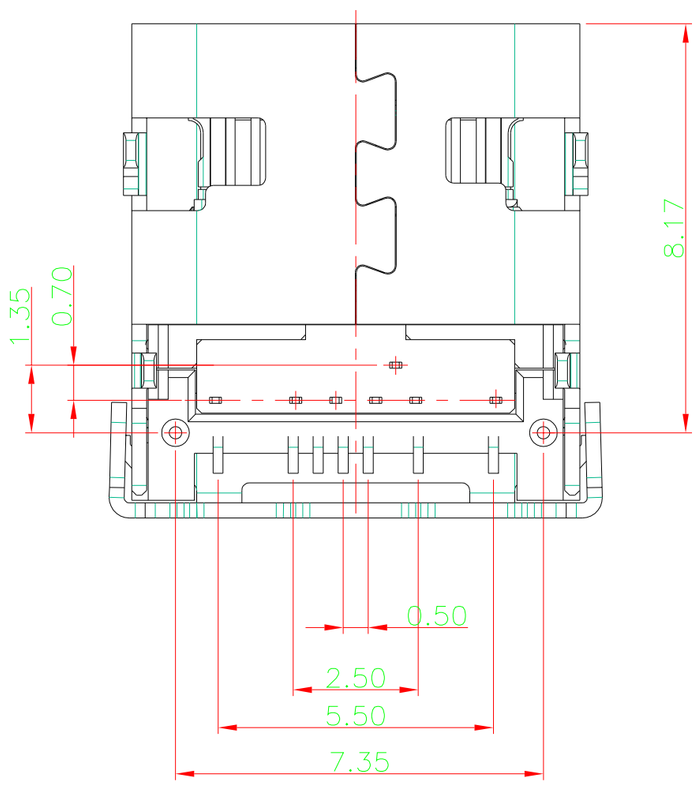

A1	GND	B12	GND
A4	VBUS	B9	VBUS
A5	CC1	B7	DN2
A6	DP1	B6	DP2
A7	DN1	B5	CC2
A9	VBUS	B4	VBUS
A12	GND	B1	GND
PIN	SIGNAL NAME	PIN	SIGNAL NAME

NO.	DESCRIPTION	MATERIAL	REMARKS	QTY
5	SHELL	STAINLESS STEEL	NI/SN Plated	1PCS
4	SPRING	STAINLESS STEEL	---	1PCS
3	SHIELDING PLATE	STAINLESS STEEL	NI Plated	1PCS
2	CONTACT	COPPER ALLOY	Au/NI Plated	1SET
1	HOUSING	HIGH TEMPERATURE PLASTIC	BLACK	1PCS

TOLERANCE			
X.X	±0.30	X.°	± 2°
.XX	±0.20	.X°	± 1°
.XXX	±0.10	.XX°	±0.5°
UNITS		mm	
MATERILA			
FINISH			

NAME(INTENDED USE) CUSTOMER DRAWING

PART NO. 5001-014101040-004

APPD:

CHED:

DRAW:

深圳市文章济美科技有限公司

TITLE: USB C F 2.0 TYPE DIP+SMT CONN

DRAWG NO. 0141-004

SCALE	SHEET	REV.
1:1	1/1	A